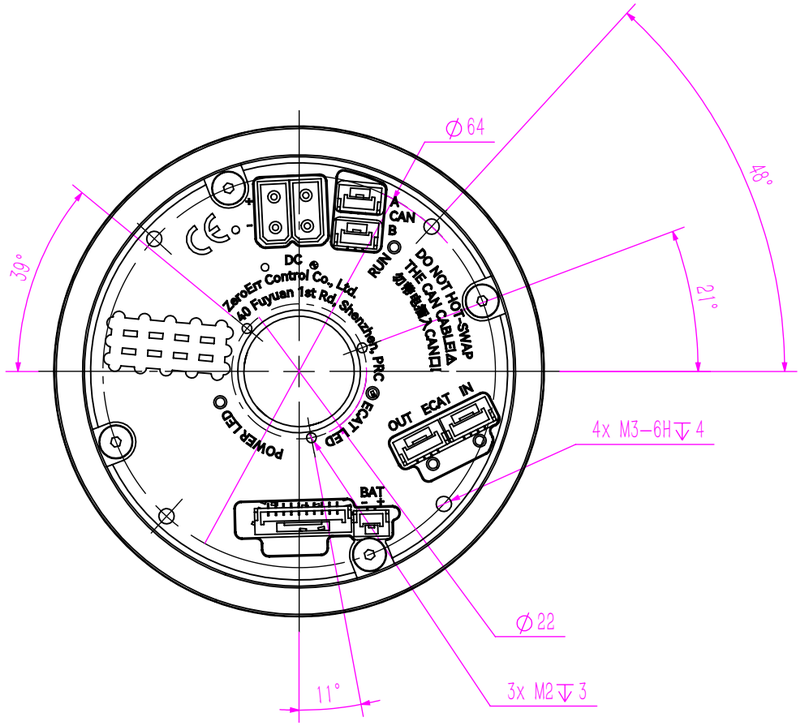

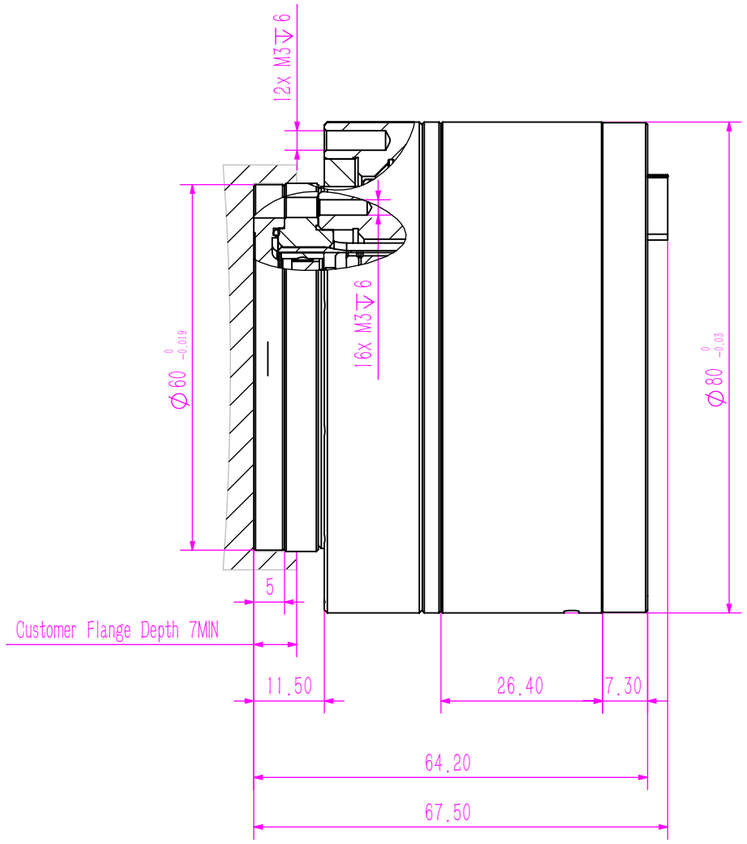

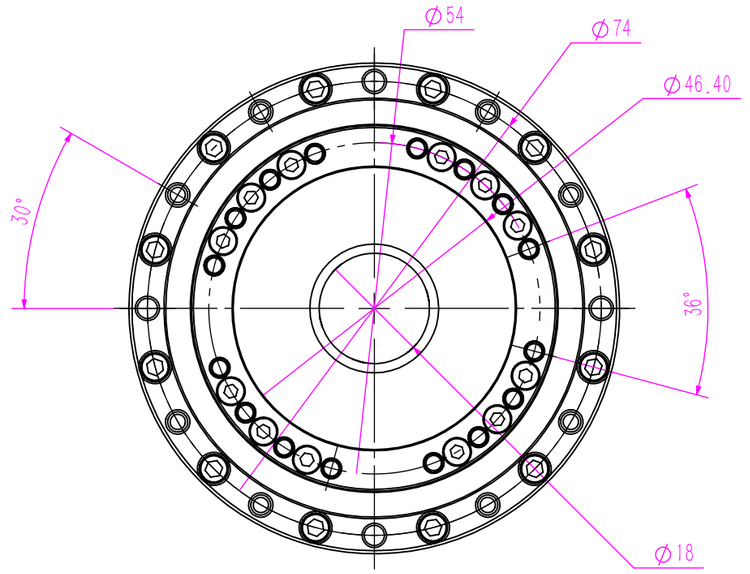



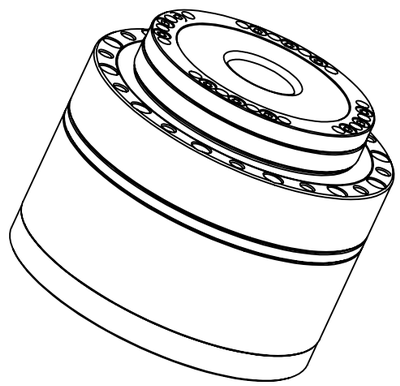

NOTE:
1.UNSPECIFIED GEOMETRIC TOLERANCE GB/T1184−H (ISO 2678−2)
2.DIMENSIONS ARE MEASURED AT 20℃
3.NO ANGULAR FIXATION (CIRCUMFERENTIAL) BETWEEN SOCKET (REAR) & THREADED HOLE (FRONT)

Motor parameters	
No. of poles	16
DC Link Voltage(V)	48
Rated Power(W)	126
Rated Torque(N · m)	0.4
Rated Speed(rpm)	3000
Rated Current(A)	3.6
Maximum torque(N · m)	1.2
Maximum Current(A)	10.8
Standstill torque(Nm)	0.44
Standstill current(A)	3.96
Resistance line−line(Ω)	0.83
Close circuit inductance(mH)	1.42
Voltage constant(V/krpm)	7.56
Torque constant(Nm/A)	0.126

Harmonic gear−ratio		17−50	17−80	17−100	17−120
Peak torque for start and stop (Nm)		44	56	70	70
Permissible max. value of ave.load torque(Nm)		34	35	51	51
Rated torque(Nm)		21	29	31	31
Permissible max. momentary torque(Nm)		91	113	143	112
Max. output rotational speed(RPM) [Using 48V operating at rated torque]		60	37.5	30	25
Without brakes	Rotor inertia(g · mm2)	41815			
	OD*Length(mm)	80x64.2			
	Weight(Kg)	1.03			
With brakes	Rotor inertia(g · mm2)	44961			
	OD*Length(mm)	80x64.2			
	Weight(Kg)	1.09			
Common parameters		Supply voltage:48V(±10%) Inner diameter:18mm IP54 & Friction brake			
Optional device		Communication type: EtherCAT/CANopen/Modbus Output encoder resolution:19/20 Bit RP/AP:±7/±15 arc sec or ±10/±25 arc sec			

UNLESS OTHERWISE SPECIFIED, DIMENSIONS APPLY BEFORE COATINGS REMOVE ALL SHARP BURRS AND BREAK ALL SHARP EDGES	
UNSPECIFIED DIMENSIONAL TOLERANCE	
>0.5−3	±0.1
>3−6	±0.1
>6−30	±0.2
>30−120	±0.3
>120−400	±0.5
ANGULAR TOLERANCE: ±1°	

MODEL			DRAWG NO.		QTY.	SCALE	MATERIAL	SURFACE TREATMENT
eRob 80I			eRob80Hxxl−XX−18EX_V6					
	NAME	DATE	SIZE	VERSION	1	1:1		
DRAWG			A3	MC2E.EX.XX	MATERIAL CODE			
CHECK			PERSPECTIVE		ZeroErr Control CO., Ltd			
APPROVE			FIRST ANGLE					